COUNTY OF LINCOLN
Carrizozo, NM 88301

Invitation to Bid 13-14-002

Angus Church Watershed Protection

Due: November 4, 2013
2:00 p.m. Local Time

A mandatory pre-bid meeting will be held at the Lincoln County Emergency Operations Center located at 111 Copper Ridge Road, Angus, NM at 9:00 am on October 30, 2013.

COUNTY OF LINCOLN
Carrizozo, NM 88301

Invitation to Bid 13-14-002

Angus Church Watershed Protection

Due: November 4, 2013, 2:00 p.m.

CONTENTS

1. **Cover Sheet**
2. **Contents**
3. **Legal Notice**
4. **Scope**
5. **NRCS Specifications**
6. **Bid sheet**
7. **Campaign Contribution Disclosure Form**
8. **Instructions to Bidders "Terms and Conditions" 19 pages**

LEGAL NOTICE

INVITATION TO BID 13-14-002

Angus Church Watershed Protection

DUE: November 4, 2013

NOTICE is hereby given that competitive sealed bids will be received by the County of Lincoln, for the Angus Church Watershed Protection Project. Complete specifications are contained in the bid package that is available at the office of the County Purchasing Agent, 300 Central Ave., Carrizozo, NM 88301 and by calling Orlando Samora at (575) 648-2385 ext. 105 or go to lincolncountynm.net, find Purchasing under County Offices to download Bids and RFP's.

All bids submitted must be clearly marked on the outside of the sealed envelope with the Bid Title, Bid Number, Date and Time of Opening. If the bid is sent by mail, the sealed envelope shall have the notation "Sealed Bid" along with the Bid Number. Bid should be sent or hand-delivered to County of Lincoln, PO Box 711 (300 Central Ave.), Carrizozo, NM 88301 by 2:00 PM Local Time, November 4, 2013. Bids received after that date and time will be returned unopened. Faxed bids cannot be accepted.

The Lincoln County Board of Commissioners will review the bids and make their final determination during a Special Commission Meeting anticipated to be on November 5, 2013 at the Lincoln County Courthouse.

Lincoln County reserves the right to accept or reject all or any part of any bid, waive minor technicalities and award the bid to best serve the interests of Lincoln County.

Orlando Samora
Purchasing Agent

Published in the *Lincoln County New* on Thursday, October 24, 2013.

COUNTY OF LINCOLN
Carrizozo, NM

Invitation to Submit Bids

Angus Church Watershed Protection

Due: November 4, 2013 2:00 Local Time

SPECIFICATIONS

SCOPE OF WORK
Miscellaneous excavation and concrete work at Angus Church.

MANDATORY PRE-BID MEETING
A mandatory pre-bid meeting will be held at the Lincoln County Emergency Operation Center located at 111 Copper Ridge Road, Angus, New Mexico at 9:00 am on **October 30, 2013.**

Pre-Construction Meeting
A pre-construction meeting will be held at the Lincoln County Emergency Operation Center located at 111 Copper Ridge Road, Angus, New Mexico at 9:00 am on **November 7, 2013**

START AND COMPLETION DATES
Work shall commence by **November 11 2013**. Contractor shall notify Justin King, Project Manager, 719-510-0026, when ready to begin the projects.

Projects must be completed no later than **November 25, 2013,** weather permitting. The Project Manager must approve weather-related nonwork days.

FINAL APPROVAL
All work requires acceptance and final approval by the Project Manager.

WAGE RATES
This project does not require a wage decision.

BID SHEET
Only one Bidder will be awarded the total project based on the lowest cost shown in the **TOTAL PRICE** column. Bid prices shall include all taxes.

NEW MEXICO CONTRACTOR'S LICENSE
You must hold a current New Mexico Contractor's License to bid on this work. Your Contractor's License number must be provided on the Bid Sheet.

BONDING AND WORKERS' COMPENSATION

1. **Bid Bond**
   A Bid Bond in the amount of at least 5% of the total price for the project must accompany the bid.

2. **Performance and Payment Bonds**
   Performance and Payment Bonds in the full amount of the award, including applicable taxes, will be due before the Notice to Proceed is issued and before the commencement of work.

3. **Workers' Compensation and General Liability Insurance**
   Successful Bidder must furnish proof of Workers' Compensation Insurance and General Liability Insurance (refer to *General Instructions, Terms and Conditions* enclosed) before Notice to Proceed can be issued and work begun.

NEW MEXICO RESIDENCE PREFERENCE NUMBER

If you hold a New Mexico Residence Preference Number and wish to have is applied to this bid, you must enter the Preference Number in the space provided on the Bid Sheet. Lincoln County is not responsible for determining your status or entering the Preference Number after the bid closes.

CAMPAIGN CONTRIBUTION DISCLOSURE FORM

Effective May 17, 2006 Chapter 81, Laws of 2006 requires and prospective contractor seeking to enter into a contract with any state agency or local public body to file a "Campaign Contribution Disclosure Form" with that state agency or local public body. **THIS FORM MUST BE FILED BY ANY PROSPECTIVE CONTARACTOR WHETHER OR NOT THEY, THEIR FAMILY MEMBER, OR THEIR REPRESENTATIVE HAS MADE ANY CONTRIBUTIONS SUBJECT TO DISCLOSURE.**

GENERAL INSTRUCTIONS, TERMS AND CONDITIONS

Lincoln County *General Instructions, Terms and Conditions* are included in this bid and are applicable to it and the resulting award.

NATURAL RESOURCES CONSERVATION SERVICE
CONSERVATION PRACTICE SPECIFICATION

MULCHING

(Ac.)

CODE 484

SPECIFICATIONS

1. **For mulching in conjunction with grass seeding.**

   a. **Site Preparation**:

   (1). If the soil is compacted, loosen to a depth of two -four inches by chiseling or disking.

   (2). Clear site of debris and smooth to facilitate seeding operations.

   b. **Time of Application:**

   (1). Apply mulch after seeding except when mulching and seeding is done in one operation.

   c. **Distribution:**

   (1) Distribute mulch evenly over the area.

   (2) Spread mulch by blower, flail spreader, or by hand.

   d. **Types and Rate Mulch:**

   Many types of material can be used. Plants having long, slender stems make the best residue mulch.

Type of Mulch	Rate (lbs/1000 ft^2)	Rate (tons/ac)
Grass Hay	28	0.6
Small Grain Straw	28	0.6
German Millet Straw	37	0.8
Dry Animal Manure	460 to 918	10.0 to 20.0
Sudan Grass Hay	46	1.0
Grain Sorghum Stalks	46	1.0
Cotton Burrs	460 to 690	10.0 to 15.0
Wood Chips	550	About 12.0
Excelsior Blanket	80-100% Cover	80-100% Cover
Jute Netting	80-100% Cover	80-100% Cover
Permanent Soil Reinforcing Mat	80-100% Cover	80-100% Cover

   e. **Anchoring** -- hay straw, etc.

   (1) Use a straight coulter type machine (a tandem disk in the closed position works well) and anchor to a depth of two inches with a maximum spacing of 12 inches between coulters.

   (2) Use a disk and incorporate the mulch only enough to anchor it. (When using a coulter machine or disk, work the area across slope if water erosion is a dominant hazard and perpendicular to erosive wind directions if wind erosion is a dominant hazard.)

   (3) Anchor by hand with a square pointed spade. Push mulch into soil two inches at 12-inch intervals.

   (4) Use netting manufactured for the purpose of anchoring mulch.

   (5) Use a commercial emulsion.

2. **Mulching Fields to Reduce Erosion Hazards**

   a. **Material and Rates**:

   Type of material depends on availability and field conditions. If mulch is needed, at least one-third of the surface should be covered.

Type of Mulch	Rate (lbs/1000ft^2)	Rate (tons/ac)
Grass Hay	70	1.5
Small Grain Straw	70	1.5
Animal Manure	1600	35.0
Sudan Grass Hay	90	2.0
Sorghum stalks	230	5.0
Corn Stalks	344	7.5
Cotton Burrs	573	12.5
Wood Chips (dry bark)	2500	60

Conservation practice standards are reviewed periodically, and updated if needed. To obtain the current version of this standard, contact the Natural Resources Conservation Service.

b. **Distribution and Anchoring:**

Distribute mulch evenly over the area. Anchor with a straight coulter, which punches mulch into the surface, or by light disking (closed position).

3. **Permanent Soil Reinforcing Mat**

The soil reinforcement mat shall consist of a machine produced mat of extruded nylon with a minimum content of 0.5 percent by weight of carbon black. The mat shall be three-dimensional with nylon-interwoven monofilaments fused at their intersections.

For concentrated water flow areas, the material shall have a minimum filament diameter of 0.40 mm (.015 inches) with a minimum thickness of 18 mm (.70 inches) weighing a minimum of 377 grams per square meter (.077 pounds per square foot). The material shall be in a roll of a width and length conducive to easy installations

For steep slopes where water flow is not concentrated, the material shall have a minimum thickness of 9 mm (.35 inches) with a minimum filament diameter of .35 mm (0.013 inches) weighing a minimum of 245 grams per square meter (0.05 pounds per square foot). The material shall be in a roll of a width and length conducive to easy installation.

a. **Site Preparation**

The finished area, where the soil reinforcement mat is to be applied, should be shaped and free from stones, clods, or trash. The area covered should be prepared as a fine seedbed, fertilized and sprigged, if applicable, prior to installation. Areas to be seeded may be planted before or after installation.

Cut a trench across the slope at the entry at least 6 inches wide and 12 inches deep. For water flow areas, cut a terminal trench, and check slot trenches at 25-foot intervals. Cut all trenches 6 inches wide and 12 inches deep.

b. **Applying the Soil Reinforcement Mat**

When the mat is unrolled, the peak side shall be down. The mat shall be applied in the direction of the flow of water, staked into the entry trench, check slots, and terminal trench. The trenches should be back-filled and the soil tamped down in all trenches and slots.

When two or more lengths are needed end-to-end, each new roll shall be overlapped at least 6 inches. If installed in concentrated water flow direction, new rolls shall be started with a transverse ditch.

When two or more widths are needed to be installed side-by-side, overlap the center strip by three inches.

c. **Ground Fastening**

Ground fasteners shall be wedge-shaped wood survey stakes with a minimum length of 12 inches or equivalent.

Use stakes at approximately 12-inch spacing across the start of each roll in the entry trench prior to backfilling.

Stake at 4-foot intervals on all overlaps and throughout the length of the roll

NATURAL RESOURCES CONSERVATION SERVICE
CONSERVATION PRACTICE CONSTRUCTION SPECIFICATION

STRUCTURE FOR WATER CONTROL - CONCRETE

CODE 587C

1. SCOPE

The work shall consist of miscellaneous excavation and concrete work at Angus Church.

2. SITE PREPARATION

Site preparation (mobilization and demobilization, clearing and grubbing, structure removal, pollution control, and water for construction) shall be in accordance with Construction Specification 587.

3. CLASS OF CONCRETE

The minimum class of concrete to be used in the construction of this work shall be 3000 unless otherwise specified or as may be shown on the drawings.

Concrete shall be classified according to the required compressive strength as tabulated below. The strength of the concrete at 28 days shall equal or exceed the tabulated Minimum Compressive Strength at 28 days for the class of concrete specified.

Class of Concrete	Minimum Compressive Strength at 28 days (psi)
5000	5,000
4000	4,000
3000	3,000
2500	2,500

4. CONCRETE MIX

At least 5 days prior to any placement of concrete, the Contractor shall furnish to the Engineer a statement of the mix proportions (including admixtures, if any) for each specified class of concrete. The statement shall include reports of laboratory tests showing that the proportions selected will produce concrete of adequate strength and quality. In the event changes become necessary, no concrete containing new or altered materials shall be placed until the Engineer has approved the revised job mix.

Fly ash shall be substitution for portland cement within the range of 20 to 25 percent by weight.

Water-retarding and/or set-retarding admixtures shall be used for any concrete placed during the period from May 15 to September 15.

The air content (by volume) of the concrete at the time of placement shall be 5% to 7%.

Unless otherwise specified herein or shown on the drawings, the slump shall be 2 to 4 inches.

5. CONCRETE MATERIALS

Portland Cement. The cement used shall be a portland cement, Type II or Type I/II unless otherwise specified. Only one brand of cement and type shall be used throughout the project.

Fly Ash. Pozolan (fly ash) shall conform to ASTM Specification C 618, Class F, for aggregates obtained within the Rio Grande basin. Class C shall be used for aggregates obtained elsewhere.

Water. Only clean water, free from acid, alkali, oil, or organic impurities, shall be used. Generally,

water suitable for drinking may be used.

Admixtures. Air-entraining admixtures shall conform to the requirements of ASTM Specification C 260. Water-retarding and or set-retarding admixtures shall conform to the requirements of ASTM Specification C 474, Types A, B, D, F or G. Admixtures used as accelerators or antifreeze compounds will not be allowed.

Aggregates. Aggregates shall be clean, hard, durable particles. The maximum size of aggregate shall be ⅝ inch to 1 inch.

Preformed Expansion Joint Filler. Preformed expansion joint filler shall conform to the requirements of ASTM Specification D 1752, Type I.

Joint Sealant. Joint sealant shall be a Type S, Grade NS, Use T or NT, Class 25 polyurethane-based, elastomeric joint sealant conforming to the requirements of ASTM Specification C 290 and shall tolerate submergence.

Waterstops. Waterstops shall be fabricated of vinyl chloride polymer or co-polymer and shall meet the following requirements:

Hardness as determined by the Shore A durometer method shall be a minimum of 60.
Specific gravity shall be a maximum of 1.2.
Tensile strength shall be a minimum of 2,500 pounds per square inch.
Ultimate elongation shall be a minimum of 450 percent.
Compression set shall be a maximum of 30 percent.
Water adsorption in weight measurements shall not exceed 5 percent.
Decrease in tensile strength and ultimate elongation after aging shall not exceed 20 percent.
There shall be no sign of failure due to brittleness at a temperature of minus 35°F.

Unless otherwise specified herein or shown on the drawings, the waterstop shall have ribbed anchor flanges and a smooth web containing a hollow tubular center bulb having a wall thickness equal to at least 3/16 inch, and the inside diameter of ¾ inch. Flanges may be of uniform thickness or may have either a converging or a diverging taper toward the edges. The overall width of the waterstop shall be 9 inches and the web thickness shall be ⅜ inch.

Curing Compound. The curing compound shall be Type 1-D translucent with fugitive red dye in accordance with ASTM Specification C 309.

Steel Reinforcement. Steel bars for concrete reinforcement shall be grade 40, 50, or 60 deformed bars conforming to one of the following specifications:

Deformed and plain billet-steel bars for concrete reinforcement (ASTM Specification A 615).
Rail-steel deformed and plain bars for concrete reinforcement (ASTM Specification A 616).
Axle-steel deformed and plain bars for concrete reinforcement (ASTM Specification A 617).

6. MEASURING CONCRETE MATERIAL

Cement. Cement shall be measured by weight.

Aggregates. Aggregates shall be measured by weight.

Water. Water shall be measured by weight or volume.

Admixtures. Dry admixtures shall be measured by weight, and paste or liquid admixtures shall be by weight or volume.

7. MIXING

Ready-mix. When used, ready-mixed concrete shall be mixed and delivered in conformance with ASTM C 94. The concrete shall be discharged from the mixer within 1.5 hours after adding the mixing water to the cement and aggregates, or cement to aggregates. This time shall be reduced to 0.75 hour when the concrete temperature exceeds 85 °F. The site foreman/superintendent shall obtain statement-of-delivery tickets from the driver and furnish those tickets to the engineer. The tickets shall document the time of loading, the revolution counter readings, and the quantities of materials used for each load of concrete.

Batchmixing at the Site. For concrete mixed at the site of the work with paving mixers or stationary construction mixers, the time of mixing after all cement and aggregates are in the mixer drum shall be not less than 1.5 minutes.

The batch shall be so charged into the mixer that some water will enter in advance of the cement and aggregates and all mixing water shall be introduced into the drum before one-fourth of the mixing time has elapsed.

Truck-Mixed Concrete. When concrete is mixed in a truck mixer loaded to its maximum capacity, the number of revolutions of the drum or blades at mixing speed shall not be less than 70 nor more than 100. If the batch is at least one-half cubic yard less than maximum capacity, the number of revolutions at mixing speed may be reduced to not less than 50; and mixing in excess of 100 revolutions shall be at the speed designated by the manufacturer of the equipment as agitating speed.

The mixing operation shall begin within 30 minutes after the cement has been added to the aggregates, and the water shall be added during mixing. When mixing is begun during or immediately after charging, a portion of the mixing water shall be added ahead of or with the other ingredients.

8. INSPECTING AND TESTING

The Engineer shall have free entry to the plant and equipment furnishing concrete. Proper facilities shall be provided for the Engineer to inspect materials, equipment, and processes and to obtain samples of the concrete. All tests and inspections will be conducted so as not to interfere unnecessarily with the manufacture and delivery of the concrete.

The following tests shall be performed in accordance with the specifications indicated:

Test	ASTM Specification
Sampling	C 172*
Slump Test	C 143*
Air Content	C 231* or C 173*
Compression Test Specimens	C 31** or C 42**
Compressive Strength	C 39** or C 42**
Unit Weight	C 138

* Test of a portion of a batch may be made on samples representative of that portion for any of the following purposes:

(1) Determining uniformity of the batch.

(2) Checking compliance with requirements for slump and air content when the batch is discharged over an extended period of time.

(3) Checking compliance of the concrete with the specifications when the whole amount being placed in a small structure, or a distinct portion of a larger structure, is less than a full batch.

** For each strength test of specimens made according to ASTM Specification C 31, C 39, or C 42, three standard test specimens shall be made. The test result shall be the average of the strengths of the three specimens; except that if one specimen in the test group shows manifest evidence of improper sampling, molding, or testing, it shall be discarded and the strengths of the remaining two specimens shall be averaged. Should more than one specimen in a test group show such defects, the entire group shall be discarded and additional samples shall be taken.

9. FOUNDATION WORK

Foundation work (diverting surface water, dewatering the construction site, dewatering borrow areas, and foundation preparation) shall be in accordance with Construction Specification 587.

10. PLACING CONCRETE

No concrete shall be placed until the subgrade, forms, and reinforcing steel have been inspected and approved. Placement of concrete on mud, dried earth, uncompacted fill, or frozen subgrade will not be permitted.

Earth foundations under the structure shall be firm and damp.

Concrete shall be placed and worked into corners of the forms and around the reinforcing steel in such a manner as to prevent the concrete materials from segregating. Depositing of the concrete shall be so regulated that the concrete may be consolidated with a minimum of lateral movement.

When conditions are such that the temperature of the concrete may be expected to exceed 85 °F at the time of delivery at the work site, during placement or during the first 24 hours after placement, the contractor shall maintain the temperature of the concrete below 85 °F during mixing, conveying, and placing.

11. PLACEMENT OF CONCRETE ON HDPE OR LLDE LINERS

Concrete placement for ramps and other appurtenances shall be in accordance to the drawings and specifications. All reinforcement steel shall be placed on flat-footed plastic rebar chairs. All rebar splices shall be fully tied to avoid loose ends. On slopes, concrete shall be placed from the bottom of the slope to the top and have a low slump to prevent sloughing down slope during placement. Only plastic shovels and internal vibrators shall be used to place concrete. Metal shovels and rodding are not allowed. Concrete forms shall be held in place by methods that avoid damaging the liner.

12. CONSTRUCTION JOINTS

Construction joints shall be made at locations shown on the drawings. If joints are needed which are not shown on the drawings, they shall be placed in locations approved by the Engineer.

Surfaces of construction joints shall be cleaned of all unsatisfactory concrete, laitance, coatings, stains, curing compound, or debris by washing and scrubbing with a wire brush or other means approved by the Engineer. The surface shall be kept moist for at least 1 hour prior to placing new concrete.

13. PROTECTION FROM FREEZING

Concrete shall not be placed during freezing weather unless adequate protection is provided to keep the concrete temperature between 50 °F and 90 °F for a period of not less than 7 days.

14. REMOVAL OF FORMS

Forms shall be removed in such a way as to prevent damage to the concrete. Supports shall be removed in a manner that will permit the concrete to take the stresses due to its own weight uniformly and gradually.

Forms shall not be removed sooner than the following minimum times, after the concrete is placed. These periods represent cumulative number of days and fractions of days, not necessarily consecutive, during which the temperature of the air adjacent to the concrete is above 50 °F.

Element	Time
Beams, arches - supporting forms and shoring	14 days
Conduits, deck slabs – supporting (inside)forms and shoring	7 days
Conduits (outside forms), sides of beams, small structures, gabion capping	24 hours
Columns, walls, spillway risers – with side or vertical load	7 days
Columns, walls, spillway riser – with no side or vertical load:	
Concrete supporting more than 30 feet of wall in place above it	7 days
Concrete supporting 20 to 30 feet of wall above it*	3 days
Concrete supporting not more than 20 feet of wall in place above it*	24 hrs.

*Age of stripped concrete shall be at least 7 days before any load is applied other than the weight of the column or wall, forms, and scaffolds for succeeding lifts.

15. FINISHING

Concrete surfaces shall be true and even and shall be free from open or rough spaces. Defective concrete, honeycombed areas, and voids left by removal of tie rods shall be repaired immediately after the removal of forms. Defective concrete shall be repaired by cutting out unsatisfactory material and placing new concrete secured by anchors in the repair area. Patching mortar for tie rod holes, et cetera, shall be thoroughly compacted into place to form a dense, well-bonded unit. All unformed areas of concrete exposed in the complete work shall have a float finish.

16. CURING

All concrete shall be cured for a period of not less than 7 days. Concrete may be moist-cured by maintaining all surfaces continually wet for the duration of the curing period. At the option of the Contractor and approval of the Engineer, the concrete may be cured using a curing compound conforming to ASTM Specification C 309. The curing compound shall be applied at a rate of not less than 1 gallon per 150 square feet of surface. Exposed surfaces shall have the compound applied as soon as the free water has disappeared. Formed surfaces shall have the compound applied immediately after the forms are removed and defective areas repaired.

17. STEEL REINFORCEMENT

Details of Construction. The reinforcing steel shall be deformed reinforcing bars of the size and spacing as shown on the drawings. The bars shall have a minimum of 2 inches concrete cover for formed and top surfaces and 3 inches for concrete placed against the earth.

Bending. Reinforcing steel may be mill or field bent. All bends shall be made without heating.

Splicing. The splices shall be at least 30 diameters of the smaller bar being spliced, but not less than 12 inches.

Support. All reinforcing bars must be securely tied and supported in their proper location with wire, patented clips, or chair supports before concrete placement begins. Bars assembled in place in horizontal mats must be tied at each intersection around the periphery of the mat and at least at every fourth bar within the mat. Horizontal bars placed in the vertical mats should be tied in at least three locations for each length or at every third intersection, whichever results in closer spaced ties. If mats are preassembled, they should be adequately tied so they remain rigid during handling and placement. The use of spot welding is not permitted.

Placing. All reinforcing steel shall be placed in the structure as shown on the drawings (steel details). Bars shall be free of loose, flaky rust and scale, oil or grease, or other material that may reduce the bond with the concrete.

18. EARTHWORK

Earthwork (common excavation and earthfill) shall be in accordance with Construction Specification 587.

19. MEASUREMENT

Concrete is measured to the neat lines shown on the drawings, and volume of concrete is computed to the nearest 0.1 cubic yard. Measurement of concrete placed against the sides of an excavation without using intervening forms is made only to the neatness or pay limits shown on the drawings. No deduction in volume is made for chamfers, rounded or beveled edges, or any void or embedded item that is less than 5 cubic feet in volume.

The weight of steel reinforcement placed in the concrete in accordance with the drawings is determined to the nearest pound by computation from the placing drawings. Measurement of hooks and bends is based on the requirements of ACI Standard 315. Computation of weights of reinforcement or welded wire fabric is based on tables in ACI Standard 315. The area of welded wire fabric reinforcement placed in the concrete in accordance with the drawings is determined to the

nearest square foot by computation from the placing drawings with no allowance for required laps. The weight of steel reinforcing in extra splices or extra-length splices approved for the convenience of the contractor or the weight of supports and ties is not included in the measurement.

Project Name: Angus Church Camp

1. ITEMS OF WORK AND CONSTRUCTION DETAILS

Items of work to be prepared in conformance with this specification and construction details are:

BID ITEM 1: CONCRETE, 4000 psi

a. This item of work shall consist of furnishing and placing of all of the concrete required for the reinforced concrete walls, as shown in the drawings. The work shall be performed in conformance with Construction Specification 587C.

b. In Section 3, CLASS OF CONCRETE, Class 4000 shall be used.

c. In Section 5, CONCRETE MATERIALS, Type II or Type I/II Portland Cement will be used as approved by the engineer.

d. In Section 5, CONCRETE MATERIALS, aggregates shall be clean, hard, durable particles with a maximum size coarse aggregate of ¾ inch diameter, and shall conform to the provisions of ASTM Designation C33.

e. In Section 7, MIXING, when ready-mix concrete is furnished, the Contractor shall furnish the engineer a statement-of-delivery ticket showing the time of loading, the revolution counter reading at the time of loading, and the quantities of materials used for each load of concrete.

f. Contractor shall provide a concrete mix design to the Engineer prior to any concrete being placed.

g. Payment will be made at the contract unit price for concrete, 4000 psi. Such payment will constitute full compensation for all labor, materials, equipment, transportation, tools, forms, bracing, and all other items necessary and incidental to the completion of the work. Such payment will constitute full compensation for Subsidiary Item, EXCAVATION.

Subsidiary Item, Excavation

a. This item of work shall consist of all the excavation required for the installation of the structure, as shown in the drawings. The work shall be done in conformance with Construction Specification 587.

b. No blasting shall be allowed for removing any of the work shown in the drawings, unless approved by the Engineer.

c. In Section 5, MEASUREMENT, there will be no measurement and payment for EXCAVATION.

d. Payment for EXCAVATION will be included in Bid Item 1, CONCRETE, 4000 psi.

Subsidiary Item, COMPACTED EARTH FILL

a. This item of work shall consist of all the compacted back fill required for the installation of the structure, as shown in the drawings. The work shall be done in conformance with Construction Specification 587.

b. In Section 5, MEASUREMENT, there will be no measurement and payment for COMPACTED EARTH FILL.

c. Payment for COMPACTED EARTH FILL will be included in Bid Item 1, CONCRETE, 4000 psi.

NATURAL RESOURCES CONSERVATION SERVICE
CONSERVATION PRACTICE CONSTRUCTION SPECIFICATION

STRUCTURE FOR WATER CONTROL

CODE 587

1. SCOPE

The work shall consist of miscellaneous excavation and concrete work at Angus Church.

Mobilization and Demobilization

The work consists of the mobilization and demobilization of the contractor's forces and equipment necessary for performing the work required identified in the specifications and/or as shown on the drawings.

Clearing and Grubbing

The work consists of clearing and grubbing and disposal of trees, snags, logs, brush, stumps, shrubs, and rubbish from the designated areas.

Structure Removal

The work shall consist of the removal, salvage, and disposal of structures (including fences) from the designated areas.

Pollution Control

The work consists of installing measures or performing work to control erosion and minimize the production of sediment and other pollutants to water and air from construction activities. The requirements of the United States Environmental Protection Agency National Pollutant Discharge Elimination System must be addressed by a separate document prepared by the owner/sponsor.

Water for Construction

The work consists of furnishing, transporting, measuring, and applying water as specified.

Removal of Water

The work consists of the removal of surface water and ground water as necessary to perform the construction required by the contract in accordance with the specifications. It shall include: (1) constructing, installing, building, and maintaining all necessary temporary water containment facilities, channels, and diversions; (2) furnishing, installing, and operating all necessary pumps, piping, and other facilities and equipment; and (3) removing all such temporary works and equipment after their intended function is no longer required.

Excavation

The work shall consist of the excavation required by the drawings and specifications and disposal of the excavated materials.

Earthfill

The work consists of the construction of earth embankments, other earthfills, and earth backfills required by the drawings and specifications.

2. SITE PREPARATION

Mobilization and Demobilization

Mobilization shall include all activities and associated costs for transportation of contractor's personnel, equipment, and operating supplies to the site; establishment of offices, buildings, and other necessary general facilities for the contractor's operations at the site; premiums paid for

performance and payment bonds including coinsurance and reinsurance agreements as applicable; and other items as may be specified in this specification or as may be shown on the drawings.

Demobilization shall include all activities and costs for transportation of personnel, equipment, and supplies not required or included in the contract from the site; including the disassembly, removal, and site cleanup of offices, buildings, and other facilities assembled on the site specifically for this contract.

Clearing and Grubbing

The limits of the area(s) to be cleared and grubbed will be marked by stakes, flags, tree markings, or other suitable methods. Trees to be left standing and uninjured will be designated by special markings placed on the trunk about 6 feet above the ground surface.

Trees and other vegetation designated to remain undisturbed shall be protected from damage throughout the duration of the construction period. Any damages resulting from the contractor's operations or neglect shall be repaired by the contractor.

Earthfill, stockpiling of materials, vehicular parking, and excessive foot or vehicular traffic shall not be allowed within the drip line of vegetation designated to remain in place. Vegetation damaged by any of these or similar actions shall be replaced with viable vegetation of the same species, similar condition, and like size.

Any cuts, skins, scrapes, or bruises to the bark of the vegetation shall be carefully trimmed and local nursery accepted procedures used to seal damaged bark.

Any limbs or branches 0.5 inch or larger in diameter that are broken, severed, or otherwise seriously damaged during construction shall be cut off at the base of the damaged limb or branch flush with the adjacent limb or tree trunk. All roots 1-inch or larger in diameter that are cut, broken, or otherwise severed during construction operations shall have the end smoothly cut perpendicular to the root. Roots exposed during excavation or other operations shall be covered with moist earth or backfilled as soon as possible to prevent the roots from drying out.

All trees not marked for preservation and all snags, logs, brush, stumps, shrubs, rubbish, and similar materials shall be cleared from within the limits of the designated areas. Unless otherwise specified, all stumps, roots, and root clusters that have a diameter of 1 inch or larger shall be grubbed out to a depth of at least 2 feet below subgrade for concrete structures and 1 foot below the ground surface at embankment sites and other designated areas.

All materials cleared and grubbed from the designated areas shall be disposed of at locations selected by the contractor unless otherwise specified or as may be shown on the drawings. The contractor is responsible for complying with all local rules and regulations and the payment of any and all fees that may result from disposal at locations away from the project site.

Structure Removal

Each structure or structure part to be removed will be marked with stakes, flags, paint, or other suitable method and/or the area boundaries from which structures must be removed will be marked using stakes, flags, paint, or other suitable method. Structures to remain undisturbed or to be salvaged will be designated by special markings.

All structures designated for removal shall be removed to the extent and depth specified, as may be shown on the drawings, or as directed by the engineer.

Structures or structure parts that are designated to be salvaged shall be carefully removed and neatly placed in the specified or approved storage location. Salvaged structures that are capable of being disassembled shall be dismantled into individual members or sections. Such structures shall be neatly and systematically match marked with paint before disassembly. All connectors and other parts shall be marked to indicate their proper location within the structure and shall be fastened to the appropriate structural member or packed in suitable containers.

Material from fences designated to be salvaged shall be placed outside the work area on the

property on which the fence was originally located. Fence wire shall be rolled into uniform rolls of suitable size and neatly piled with other salvaged materials. Posts and rails shall be neatly stacked.

Refuse materials resulting from structure removal shall be disposed of at locations selected by the contractor unless otherwise specified or as may be shown on the drawings. Disposal by burning shall be in accordance with local rules and regulations.

Pollution Control

The following erosion and sediment control measures and works shall include, but are not limited to, the following:

Staging of earthwork activities—The excavation and moving of soil materials shall be scheduled to minimize the size of areas disturbed and unprotected from erosion for the shortest reasonable time.

Seeding—Seeding to protect disturbed areas shall occur as soon as reasonably possible following completion of that earthwork activity.

Mulching—Mulching to provide temporary protection of the soil surface from erosion.

Diversions—Diversions to divert water from work areas and to collect water from work areas for treatment and safe disposition. They are temporary and shall be removed and the area restored to its near original condition when the diversions are no longer required or when permanent measures are installed.

Stream crossings—Culverts or bridges where equipment must cross streams. They are temporary and shall be removed and the area restored to its near original condition when the crossings are no longer required or when permanent measures are installed.

Sediment basins—Sediment basins collect, settle, and eliminate sediment from eroding areas from impacting properties and streams below the construction site(s). These basins are temporary and shall be removed and the area restored to its original condition when they are no longer required or when permanent measures are installed.

Sediment filters—Straw bale filters or geotextile sediment fences trap sediment from areas of limited runoff. Sediment filters shall be properly anchored to prevent erosion under or around them. These filters are temporary and shall be removed and the area restored to its original condition when they are no longer required or when permanent measures are installed.

Waterways—Waterways for the safe disposal of runoff from fields, diversions, and other structures or measures. These works are temporary and shall be removed and the area restored to its original condition when they are no longer required or when permanent measures are installed.

Other—Additional protection measures as specified or required by Federal, State, or local government permits.

Removal of water from the construction site, including borrow areas, shall be accomplished so that erosion and the transporting of sediment and other pollutants are minimized. Pipes, casings, and any other material used to dewater the site shall be removed from temporary wells. The wells shall be filled to ground level with clean gravel or other suitable material in accordance with applicable state and local laws and regulations. The contractor shall exercise extreme care to prevent pollution of the ground water by these actions.

The contractor shall provide watertight tanks or barrels or construct a sump sealed with plastic sheets to dispose of chemical pollutants, such as drained lubricating or transmission fluids, grease, soaps, concrete mixer washwater, or asphalt, produced as a by-product of the construction activities. At the completion of the construction work, sumps shall be removed and the area restored to its original condition. Sump removal shall be conducted without causing pollution.

Sanitary facilities, such as chemical toilets, or septic tanks shall not be located next to live streams, wells, or springs. They shall be located at a distance sufficient to prevent contamination of any water source. At the completion of construction activities, facilities shall be disposed of without causing pollution and in accordance with all applicable state and local laws and regulations.

The burning of brush or slash and the disposal of other materials shall adhere to state and local regulations.

Fire prevention measures shall be taken to prevent the start or spreading of wildfires that may result from project activities. Firebreaks or guards shall be constructed and maintained.

All public access or haul roads used by the contractor during construction of the project shall be sprinkled or otherwise treated to fully suppress dust. All dust control methods shall ensure safe construction operations at all times. If chemical dust suppressants are applied, the material shall be a commercially available product specifically designed for dust suppression and the application shall follow manufacturer's requirements and recommendations.

All pollution control measures and temporary works shall be adequately maintained in a functional condition for the duration of the construction period. All temporary measures shall be removed and the site restored to near original condition.

Water for Construction

The contractor shall install and maintain access and haul roads and furnish, operate, and maintain all pumps, piping, tanks, storage, and other facilities required to load, transport, store, distribute, and use construction water as specified.

Water for dust abatement and haul road maintenance shall be applied to haul roads and other dust producing areas as needed to prevent air pollution or excessive dust (which causes impaired vision on trafficked roads and in work areas) and to maintain the roads in good condition for safe and efficient operation during periods of use. Roads that may be jointly used with the public and by the contractor's equipment shall have dust abatement provisions acceptable to the public entity that has road maintenance responsibility.

3. FOUNDATION WORK

Diverting Surface Water

The contractor shall install, maintain, and operate all cofferdams, channels, flumes, sumps, and all other temporary diversion and protective works needed to divert streamflow and other surface water through or around the construction site. Control of surface water shall be continuous during the period that damage to construction work could occur. Unless otherwise specified and/or approved, the diversion outlet shall be into the same drainageway that the water would have reached before being diverted.

Dewatering the Construction Site

Foundations, cutoff trenches, and all other parts of the construction site shall be dewatered and kept free of standing water and muddy conditions as necessary for the proper execution of the work. The contractor shall furnish, install, operate, and maintain all drains, sumps, pumps, casings, well points, and all other equipment required to properly dewater the site as specified. Dewatering systems that cause a loss of soil fines from the foundation areas will not be permitted.

Dewatering Borrow Areas

The contractor shall maintain all borrow areas free of surface water or otherwise provide for timely and effective removal of surface and subsurface water that accumulates within a borrow area that may be opened and/or utilized.

Foundation Preparation

Foundations for earthfill shall be stripped to remove vegetation and other unsuitable material or shall be excavated as specified.

Except as otherwise specified, earth foundation surfaces shall be graded to remove surface irregularities and shall be scarified parallel to the axis of the fill or otherwise acceptably scored and loosened to a minimum depth of 2 inches. The moisture content of the loosened material shall be controlled as specified for the earthfill, and the surface material of the foundation shall be compacted and bonded with the first layer of earthfill as specified for subsequent layers of earthfill.

Earth abutment surfaces shall be free of loose, uncompacted earth in excess of 2 inches in depth normal to the slope and shall be at such a moisture content that the earthfill can be compacted against them to produce a good bond between the fill and the abutments.

Rock foundation and abutment surfaces shall be cleared of all loose material by hand or other effective means and shall be free of standing water when fill is placed upon them. Occasional rock outcrops in earth foundations for earthfill, except in dams and other structures designed to restrain the movement of water, shall not require special treatment if they do not interfere with compaction of the foundation and initial layers of the fill or the bond between the foundation and the fill.

Foundation and abutment surfaces shall be no steeper than one horizontal to one vertical unless otherwise specified or as may be shown on the drawings. Test pits or other cavities shall be filled with compacted earthfill conforming to the specifications for the earthfill to be placed upon the foundation.

4. EARTHWORK

Common Excavation

Make all excavation to planned lines and grades to adequately allow proper placement and installation of the structure(s).

Common excavation is defined as the excavation of all materials that can be excavated, transported, and unloaded using heavy ripping equipment and wheel tractor-scrapers with pusher tractors or that can be excavated and dumped into place or loaded onto hauling equipment by excavators having a rated capacity of one cubic yard or larger and equipped with attachments (shovel, bucket, backhoe, dragline, or clam shell) appropriate to the material type, character, and nature of the materials.

Heavy ripping equipment is a rear-mounted, heavy duty, single-tooth, ripping attachment mounted on a track type tractor having a power rating of at least 250 flywheel horsepower unless otherwise specified.

Wheel tractor-scraper is a self-loading (not elevating) and unloading scraper having a struck bowl capacity of at least 12 cubic yards.

Pusher tractor is a track type tractor having a power rating of at least 250 flywheel horsepower equipped with appropriate attachments.

Blasting shall not be used for common excavation.

To the extent they are needed, all suitable material from the specified excavations shall be used in the construction of required permanent earthfill or rockfill. The suitability of material for specific purposes is determined by the engineer. The contractor shall not waste or otherwise dispose of suitable excavated material.

All surplus or unsuitable excavated materials are designated as waste and shall be disposed of by the contractor at sites of his own choosing away from the site of the work unless otherwise specified or as may be shown on the drawings. Off-site disposal shall be in an environmentally acceptable manner that does not violate local rules and regulations.

Excavations shall comply with OSHA Construction Industry Standards (29CFR Part 1926) Subpart P, Excavations, Trenching, and Shoring. All excavations shall be completed and maintained in a safe and stable condition throughout the total construction phase. Structure and trench excavations shall be completed to the specified elevations and to the length and width

required to safely install, adjust, and remove any forms, bracing, or supports necessary for the installation of the work. Excavations outside the lines and limits shown on the drawings or specified herein required to meet safety requirements shall be the responsibility of the contractor in constructing and maintaining a safe and stable excavation.

When the quantities of suitable material obtained from specified excavations are insufficient to construct the specified earthfills and earth backfills, additional material shall be obtained from the designated/specified borrow areas. The extent and depth of borrow pits within the limits of the designated borrow areas shall be as approved by the engineer.

Borrow pits shall be excavated and finally dressed to blend with the existing topography and sloped to prevent ponding and to provide drainage.

Excavation in earth beyond the specified lines and grades shall be corrected by filling the resulting voids with approved, compacted earthfill. The exception to this is that if the earth is to become the subgrade for riprap, rockfill, sand or gravel bedding, or drainfill, the voids may be filled with material conforming to the specifications for the riprap, rockfill, bedding, or drainfill. Before correcting an overexcavation condition, the contractor shall review the planned corrective action with the engineer and obtain approval of the corrective measures.

Earthfill

Earthfill is composed of natural earth materials that can be placed and compacted by construction equipment, hand tamping, manually directed power tampers or vibrating plates, or their equivalent operated in a conventional manner.

All fill material shall be obtained from required excavations and designated borrow areas. The selection, blending, routing, and disposition of material in the various fills shall be subject to approval by the engineer.

Fill materials shall contain no frozen soil, sod, brush, roots, or other perishable material. Rock particles larger than the maximum size specified for each type of fill shall be removed prior to compaction of the fill.

The types of material used in the various fills shall be as listed and described in the specifications and drawings.

Earthfill shall not be placed until the required excavation and foundation preparation have been completed and the foundation has been inspected and approved by the engineer. Earthfill shall not be placed upon a frozen surface nor shall snow, ice, or frozen material be incorporated in the earthfill matrix.

Earthfill shall be placed in approximately horizontal layers. The thickness of each layer before compaction shall not exceed 6 inches unless otherwise specified as may be shown on the drawings. Materials placed by dumping in piles or windrows shall be spread uniformly to not more than the specified thickness before being compacted.

Hand compacted earth backfill shall be placed in layers whose thickness before compaction does not exceed the maximum thickness specified for layers of earth backfill compacted by manually directed power tampers.

Earthfill shall be placed in a manner that prevents damage to the structures and allows the structures to assume the loads from the earth backfill gradually and uniformly. The height of the earthfill adjacent to a structure shall be increased at approximately the same rate on all sides of the structure.

Earthfill in dams, ponds, levees, and other structures designed to restrain the movement of water shall be placed to meet the following additional requirements:

The distribution of materials throughout each zone shall be essentially uniform, and the earthfill shall be free from lenses, pockets, streaks, or layers of material differing substantially in texture, moisture content, or gradation from the surrounding material.

If the surface of any layer becomes too hard and smooth for proper bond with the succeeding layer, it shall be scarified parallel to the axis of the fill to a depth of not less than 2 inches before the next layer is placed.

The top surface of embankments shall be maintained approximately level during construction except the final surface shall have a crown or cross-slope of about 2 percent to ensure effective drainage.

The embankments shall be constructed in continuous layers from abutment to abutment except where openings to facilitate construction or to allow the passage of streamflow during construction are specifically authorized in the contract.

The bonding surface of the embankment in place shall be stripped of all material not meeting the requirements of this specification and shall be scarified, moistened, and recompacted when the new earthfill is placed against it. This ensures a good bond with the new earthfill and obtains the specified moisture content and density at the contact of the inplace and new earthfills.

In addition, compaction of backfill shall be acceptable when one of the following conditions have been met:

- Two complete passes are made over the entire surface area of each lift by such equipment as the sheepsfoot roller, heavily loaded rubber-tired equipment, or pneumatic rollers.
- Three complete passes are made over the entire surface area of each lift by heavily loaded rubber-tired scrapers.
- Track-type (crawler) tractor equipment may be used provided it is routed so the entire surface area of each lift is traversed by not less than four passes of the tracks.

Each lift shall be compacted before placement of material for the next lift.

Unless otherwise specified, earthfill material, when placed, shall contain sufficient moisture so that a sample when taken in the hand and squeezed shall remain intact when released.

Earthfill shall be placed carefully against all indicated portions of the structure so as not to disturb the finished structure. Unless otherwise specified, heavy equipment, including backhoe mounted power tampers or vibrating compactors and manually directed vibrating rollers, shall not be operated within 2 feet of any structure. Compaction within 2 feet of any structure will be by hand tamping, hand operated mechanical tamper, or other methods approved by the engineer.

No backfill or other load will be placed against concrete structures prior to 72 hours after removal of the forms. Compaction of earthfill adjacent to concrete structures shall not be started until the following time intervals have elapsed after placement of the concrete.

Structure	Time interval (days)
Vertical or near-vertical walls with earth loading on one side only	14
Walls backfilled on both sides simultaneously	7
Conduits and spillway risers, cast-in-place (with inside forms in place)	7
Conduits and spillway risers, cast-in-place (inside forms removed)	14
Conduits, pre-cast, cradled	2
Conduits, pre-cast, bedded	1
Cantilever outlet bents (backfilled both sides simultaneously)	3

5. MEASUREMENT

Site Preparation

There is no measurement for mobilization and demobilization, structure removal, pollution control, or water for construction.

The area cleared and grubbed shall be measured to the nearest 0.1 acre.

Foundation Work

There is no measurement for diverting surface water, dewatering the construction site, or foundation preparation.

Earthwork

The volume of excavation shall be measured within the specified limits and computed to the nearest cubic yard by the method of average cross-sectional end areas.

The earthfill volume shall be measured within the specified limits and computed to the nearest cubic yard by the method of average cross-sectional end areas.

Project Name: Angus Church Camp

Date:

6. ITEMS OF WORK AND CONSTRUCTION DETAILS

Items of work to be prepared in conformance with this specification and construction details are:

BID ITEM 2: COMPACTED EARTH FILL

a. This item shall consist of the item in Section 1, Scope: Clearing and Grubbing, and Structure Removal; and the item in Section 2, Site Preparation: Clearing and Grubbing, and Structure Removal.

b. In Section 3, Foundation Work, all of it in its entirety.

c. In Section 4, Earthwork, all of it in its entirety.

d. In Section 5, Measurement, no measurement will be made for Site Work and Foundation Preparation; Earthwork will be measured as stated.

e. Payment for COMPACTED EARTH FILL will be made at the contract unit price for COMPACTED EARTH FILL, by the nearest cubic yard placed at the site as directed. Such payment will constitute full compensation for all labor, materials, equipment, excavation, backfill, and all other items necessary and incidental to the completion of the project.

BID ITEM 3: COMMON EXCAVATION

a. This item shall consist of the item in Section 1, Scope: Clearing and Grubbing, and Structure Removal; and the item in Section 2, Site Preparation: Clearing and Grubbing, and Structure Removal.

b. In Section 3, Foundation Work, all of it in its entirety.

c. In Section 4, Earthwork, all of it in its entirety.

d. In Section 5, Measurement, no measurement will be made for Site work and Foundation Preparation; Earthwork will be measured as stated.

e. Payment for COMMON EXCAVATION will be made at the contract unit price for COMMON EXCAVATION, by the nearest cubic yard removed from the site as directed. Such payment will constitute full compensation for all labor, materials, equipment, excavation, backfill, and all other items necessary and incidental to the completion of the project.

ANGUS CHURCH CAMP
DSR No. 2012-13A
LITTLE BEAR FIRE EWP
BID SCHEDULE

ITEM NO.	WORK	SPEC. NO.	ESTIMATED QUANTITY	UNIT	UNIT PRICE	AMOUNT
1.	Reinforced Concrete 4000 psi	587C	40	CY	_____	_____
2.	Compacted Earth Fill	587	150.0	CY	_____	_____
~~3.~~	~~Common Excavation~~	~~587~~	~~200.0~~	~~CY~~	_____	_____
~~4.~~	~~Mulch~~	~~484~~	~~7.0~~	~~AC~~	_____	_____
~~5.~~	~~Wattles~~		~~100.0~~	~~EA~~	_____	_____
6.	Relocate Jersey Barriers		10.0	EA	_____	_____

TOTAL BID = $ _____

COMPANY NAME: _____
COMPANY ADDRESS: _____
_____
_____

COMPANY PHONE NUMBER: _____
CONTRACTORS SIGNATURE: _____ **DATE:** _____

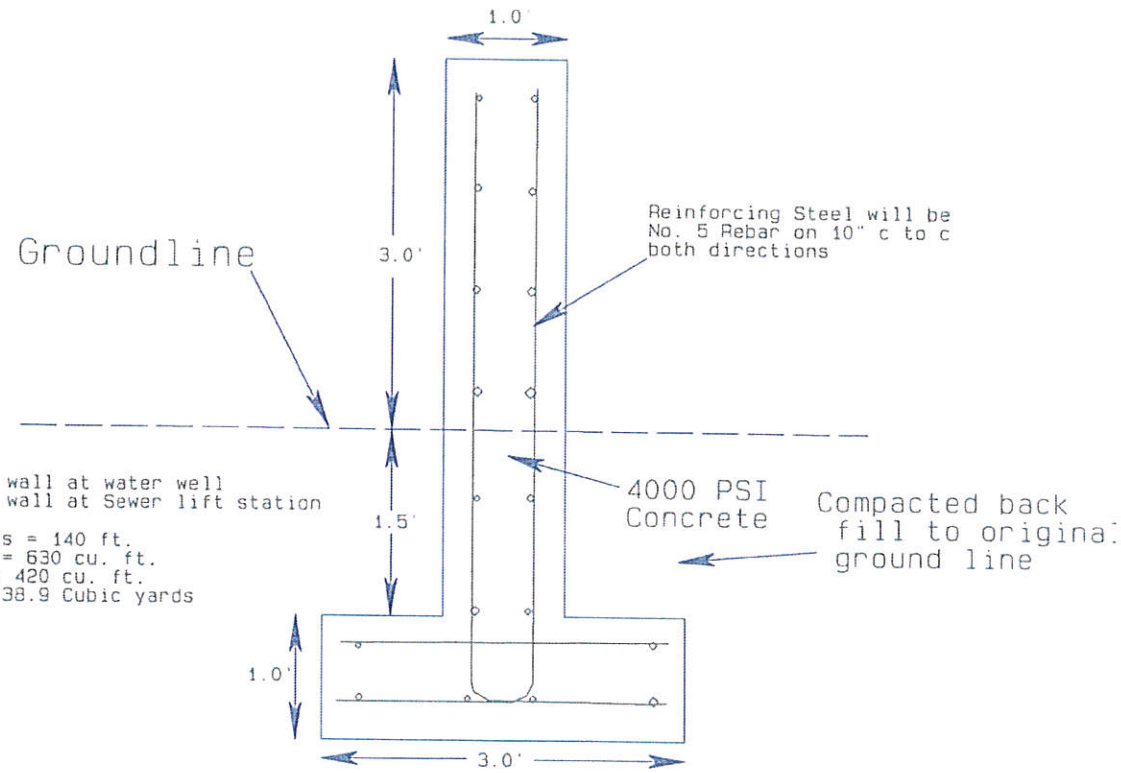

Note: 1 -95 ft. section of wall at water well
1 - 45 ft section of wall at Sewer lift station

Total length of walls = 140 ft.
4.5' X 1.0' X 140' = 630 cu. ft.
3.0' X 1.0' X 140' = 420 cu. ft.
1050 cu. ft. / 27 = 38.9 Cubic yards

Typical Section
Concrete Wall

Little Bear EWP - Bonita Park Concrete Walls	
Scale: 1"=2	Ruidoso New Mexico
Date: 8/16/2013	
Revised:	Drawn By:
Job:	Surveyor:

COUNTY OF LINCOLN

P.O. Box 711
300 Central Ave
Carrizozo, NM 88301

575-648-2385 phone
575-648-2381 fax

BID SHEET

TITLE	BID NO.	OPENING DATE/TIME	AWARD DATE	DATE MAILED
Angus Church Watershed Protection	13-14-002	Nov 4, 2013 2:00 p.m.	Nov 5, 2013	Oct 25, 2013

ITEM	DESCRIPTION Only one Bidder will be awarded the total project based on the lowest cost shown in the Total Price column.					BID PRICE INCLUDING TAX
Item No.	Work	Spec No.	Est Qty.	Unit	Unit Price	Amount
1.	Reinforced Concrete 4000 psi	587C	40	CY		
2.	Compacted Earth Fill	587	150.0	CY		
~~3.~~	~~Common Excavation~~	~~587~~	~~200.0~~	~~CY~~		
~~4.~~	~~Mulch~~	~~484~~	~~7.0~~	~~AC~~		
~~5.~~	~~Wattles~~		~~100.0~~	~~EA~~		
6.	Relocate Jersey Barriers		10.0	EA		
1.	Angus Church Watershed Protection Total Price					$ _____
2.	New Mexico Contractor's License No._____					
3.	New Mexico Residence Preference No._____					
4.	All general contractors bidding more than $60,000 on a public works contract **MUST** be Registered with the Labor & Industrial Division. Supply your **DOL registration number**_____					
5.	Have you included a Bid Bond of at least 5% of the total of Item 1?					Yes____ No____

Lincoln County reserves the right to accept or reject all or any part of any bid, waive minor technicalities and award the bid to best serve the interests of Lincoln County.

To the County of Lincoln Purchasing Department: In compliance with the Bid Specifications, the undersigned offers and agrees to furnish any and all items upon which prices are offered at the price set opposite each item to the County within the time specified

Bidder's Signature and Information

Company Name and Address

_____

_____

_____

Phone No. _____

Fax No. _____

Prompt Payment Terms _____

Typed or Printed Name of

_____
(Authorized Person & Title)

_____
(Signature)

NM CRS No. _____

Federal ID No. _____

NM Residence Preference No. _____

NOTE: FACSIMILE BIDS WILL NOT BE ACCEPTED.

CAMPAIGN CONTRIBUTION DISCLOSURE FORM

Pursuant to Chapter 81, Laws of 2006, any prospective contractor seeking to enter into a contract with any state agency or local public body must file this form with that state agency or local public body. The prospective contractor must disclose whether they, a family member or a representative of the prospective contractor has made a campaign contribution to an applicable public official of the state or a local public body during the two years prior to the date on which the contractor submits a proposal or, in the case of a sole source or small purchase contract, the two years prior to the date the contractor signs the contract, if the aggregate total of contributions given by the prospective contractor, a family member or a representative of the prospective contractor to the public official exceeds two hundred and fifty dollars ($250) over the two year period.

THIS FORM MUST BE FILED BY ANY PROSPECTIVE CONTRACTOR WHETHER OR NOT THEY, THEIR FAMILY MEMBER, OR THEIR REPRESENTATIVE HAS MADE ANY CONTRIBUTIONS SUBJECT TO DISCLOSURE.

The following definitions apply:

"**Applicable public official**" means a person elected to an office or a person appointed to complete a term of an elected office, who has the authority to award or influence the award of the contract for which the prospective contractor is submitting a competitive sealed proposal or who has the authority to negotiate a sole source or small purchase contract that may be awarded without submission of a sealed competitive proposal.

"**Campaign Contribution**" means a gift, subscription, loan, advance or deposit of money or other thing of value, including the estimated value of an in-kind contribution, that is made to or received by an applicable public official or any person authorized to raise, collect or expend contributions on that official's behalf for the purpose of electing the official to either statewide or local office. "Campaign Contribution" includes the payment of a debt incurred in an election campaign, but does not include the value of services provided without compensation or unreimbursed travel or other personal expenses of individuals who volunteer a portion or all of their time on behalf of a candidate or political committee, nor does it include the administrative or solicitation expenses of a political committee that are paid by an organization that sponsors the committee.

"**Contract**" means any agreement for the procurement of items of tangible personal property, services, professional services, or construction.

"**Family member**" means spouse, father, mother, child, father-in-law, mother-in-law, daughter-in-law or son-in-law.

"**Pendency of the procurement process**" means the time period commencing with the public notice of the request for proposals and ending with the award of the contract or the cancellation of the request for proposals.

"**Person**" means any corporation, partnership, individual, joint venture, association or any other private legal entity.

"**Prospective contractor**" means a person who is subject to the competitive sealed proposal process set forth in the Procurement Code or is not required to submit a competitive sealed proposal because that person qualifies for a sole source or a small purchase contract.

"**Representative of a prospective contractor**" means an officer or director of a corporation, a member or manager of a limited liability corporation, a partner of a partnership or a trustee of a trust of the prospective contractor.

DISCLOSURE OF CONTRIBUTIONS:

Contribution Made By: _____

Relation to Prospective Contractor: _____

Name of Applicable Public Official: _____

Date Contribution(s) Made: _____

Amount(s) of Contribution(s) _____

Nature of Contribution(s) _____

Purpose of Contribution(s) _____

(The above fields are unlimited in size)

_____ _____

Signature Date

_____

Title (position)

--OR—

NO CONTRIBUTIONS IN THE AGGREGATE TOTAL OVER TWO HUNDRED FIFTY DOLLARS ($250) WERE MADE to an applicable public official by me, a family member or representative.

_____ _____

Signature Date

_____

Title (Position)

COUNTY OF LINCOLN
INVITATION FOR BIDS

GENERAL INSTRUCTIONS, TERMS AND CONDITIONS

IMPORTANT:
READ CAREFULLY BEFORE SUBMITTING BIDS. FAILURE TO DO SO SHALL NOT ABSOLVE THE BIDDER FROM RESPONSIBILITY TO PERFORM OR DELIVER AS SPECIFIED.

1. APPLICABILITY. Except as otherwise specifically provided in this bid, these General Instructions, Terms and Conditions shall govern the procurement of the items specified in this bid. In the event of a conflict between these General Instructions, Terms and Conditions, Supplemental Conditions or the specifications of this bid, the order of application shall be the Specifications, Supplemental Conditions and the General Instructions, Terms and Conditions. In addition, the Public Purchases Ordinance and promulgated Rules and Regulations shall apply.

2. DEFINITIONS. As used in this bid, the definitions of the Public Purchases Ordinance apply, including the following:

   A. "Bid" means all documents, including those attached or incorporated by reference, issued by the County Manager's Office for soliciting offers to provide goods, services or construction.

   B. "Contract" means any agreement for the procurement of goods, services, construction or concessions. A Purchase Order issued in response to an offer constitutes a contract.

   C. "Contractor" means an offeror who has been awarded a contract.

   D. "County" means the County of Lincoln, New Mexico.

E. "Purchase Order" means a document issued by the County Manager's Office directing the Contractor to deliver goods, services or construction.

NOTE: F AND G MAY NEED TO BE MODIFIED.

F. "Purchasing Office" means the Office of the Manager of the County.

G. "Purchasing Officer" means the County Manager or his designee.

H. "Bidder" means a business that submits a response to a competitive solicitation.

I. "Responsible Bidder" means a business which has the capability in all respects to perform fully the contract requirements set out in the competitive solicitation, and the integrity and reliability which will assure good faith performance, and who has not violated or attempted to violate any provision of law or ethical conduct. Factors which may be considered in determining the offeror's capability to perform, among others, are its financial resources, production or service facilities, service reputation and experience.

J. "Responsive Bid" means a written offer to furnish goods, services or construction in conformity with standards, specifications, delivery terms and conditions and all other requirements established in a competitive solicitation.

K. "Successful Bidder" means the lowest responsible bidder to whom Lincoln County, on the basis of the County's evaluation, makes an award. A successful bidder does not become a contractor until a purchase order is signed by the County.

3. PREPARATION OF BID:

A. Submission: All bids must be submitted on the Invitation for Bids form enclosed. Failure to do so may disqualify your offer. It is the responsibility of the bidder to submit sufficient additional information to allow for a thorough evaluation of the bid submitted.

B. Preparation Method: All information required in this Bid must be typewritten or handwritten in ink and must be legible. Erasures or other changes must be initialed by the person signing the offer. Proposals must be made out and signed in the corporate or other name of bidder and must be fully and properly executed by an authorized person.

C. Unit Prices: The unit price for each item offered shall be shown unless otherwise specified. In the case of a discrepancy between the unit price and the extended price, the unit price will govern in determining the price used for evaluation. Unit prices offered should be for the units specified.

D. Delivery Time: Delivery time stated in the specifications shall apply. Deviations by the bidder shall be stated in the Specifications. Time, if stated in number of days, will be consecutive calendar days.

E. Payment Terms: The Invitation for Bids form provides space for the bidder to identify the payment terms that the bidder is offering. Terms of less than twenty (20) days will not be considered. The discount term shall not begin until the goods, services or construction have been delivered and accepted and the correct invoice received in the County Accounts Payable Office.

F. Freight Policy: Freight will be F.O.B. Destination (as indicated on the Invitation for Bids form), freight prepaid, unless otherwise specified in this Bid.

G. Taxes: Bidders shall not include any applicable gross receipts taxes in its offered price, unless specified otherwise in this bid, and such offer will be construed in that manner. The County will, under appropriate circumstances, furnish a non-taxable transaction certificate. Determination of whether the tax is due and payment of the tax is the responsibility of the bidder. Applicable taxes are to be included in each invoice due and may not be billed more than sixty (60) days after providing the services to which the taxes apply.

H. New Material, etc.: All materials, supplies, equipment and vehicles specified in this bid shall be new, the latest in production and

manufactured within the last twelve (12) months (computed from the date and time of offer opening) unless otherwise indicated. This does not apply to materials, supplies, equipment or vehicles used by the Contractor to provide the required items of tangible personal property, services or construction.

I. Warranty: Materials furnished by the successful bidder shall be accompanied by the manufacturer's written warranty against defects in quality, craftsmanship and materials.

The bidder agrees that the items of tangible personal property, services or construction furnished under any contract resulting from this bid shall be covered by the most favorable commercial warranties the bidder gives to any customer for such items. Further, the bidder agrees that the rights and remedies provided in such warranties extend to the County and are in addition to and do not limit any rights afforded to the County by any other clause of this bid. The bidder agrees not to disclaim warranties of fitness for a particular purpose of merchantability. Warranties shall become effective at the time of acceptance.

J. Equivalent Bids: Where a product is characteristic of a sole manufacturer, or where a brand name is indicated in the specifications, it shall be defined to mean "minimum acceptable level" or "minimum quality required" by the County unless the specifications state that no substitutions or equivalents will be allowed. The similarity to any brand name is for the purpose of describing a standard quality, performance and characteristics desired and is not intended to limit or restrict competition, as required in NMSA 1978, 13-1-167 and 168. If the bidder offers an item other than the one specified, which the bidder considers comparable, the manufacturer's name and model number of that item must be specified in the bid and sufficient performance specification and descriptive data provided to permit a thorough evaluation. The bidder must provide proof that the merchandise bid is equal to or better than the specifications. Failure to provide the appropriate information may result in disqualification of the bid.

K. Intent of Specifications: It is the intent of the specifications to describe the minimum requirements for a specific item of equipment.. All parts

not specifically mentioned which are required for a complete unit, shall conform in design strength, quality of material and workmanship to the highest standards of engineering practice. It shall be equipped with the manufacturer's equipment and accessories which are included as standard in the advertised and published literature for the unit. No such items of equipment or accessories shall be removed or omitted for the reason that it was not specified in the bid.

L. Exception to Specifications: Bidders are to state any exceptions taken to this Bid on the Specifications. If no exceptions are stated, the bidder is required to furnish the items exactly as specified and to comply with all other requirements of this bid.

M. Indemnity: The bidder to whom an award has been made as a result of this bid expressly agrees to defend, indemnify and save harmless the County and its officer, agents and employees from and against any and all claims, suits, demands, actions, or proceedings of every nature and description brought because of any injury or damage received or sustained by any person, persons, or property arising out of the bidder's providing the goods, services or construction pursuant to the bid or by reason of any act or omission, neglect or misconduct of the bidder, the agents, employees or subcontractors of the bidder or the agents or employees of any subcontract of the bidder. The indemnity required herein shall not be limited by reason of the specification of any particular insurance coverage.

N. Patent Indemnity: If any item furnished pursuant to any contract resulting from this bid shall be covered by any patent, copyright, or application for patent or copyright, the bidder shall defend, indemnify and save harmless the County from any and all loss, cost or expense or any and all claims, suits or judgments as a result of the use of such item in violation of rights under such patent, copyright, or application for patent or copyright.

O. Public Inspection: Each bid shall be open to public inspection, except to the extent the bidder designates trade secrets or other proprietary data to be confidential. Material so designated shall accompany the bid and each page shall be clearly marked and readily separable from the bid in order to facilitate public inspection of the non-confidential portion of

the bid. Prices and makes and models or catalog numbers of the items offered, deliveries and terms of payment shall be publicly available at the time of the opening of the bid, regardless of any designation to the contrary. The County shall endeavor to restrict distribution of the material designated as confidential to only those individuals involved in the review and analysis of the bids. Bidders are cautioned that materials designated confidential may nevertheless be subject to disclosure to any New Mexico citizen under the Inspection of Public Records Act (Sections 14-2-1 through 14-2-3 NMSA 1978).

P. Material Safety Data Sheets("MSDS"): To comply with the Occupational Health and Safety Regulation 1910.1200 for general standards on handling hazardous materials, material safety data sheets may be required for all or part of the products included on this bid. It is the responsibility of the bidder to make this determination and, if required, a copy of the MSDS must accompany the product when delivered to the end user. Failure to comply with this requirement may cause the delivery of products to be rejected and all costs related to such action to be borne by the bidder.

4. ETHICAL CONDUCT: By submitting its bid in response to this invitation, the bidder certifies that:

A. It has not offered, given or agreed to give to any County employee or former employee, a gratuity or offer of employment to influence the preparation of or recommendation of award of this bid;

B. It has not retained a person or solicited or secured a County Contract for a contingent fee;

C. It has not taken any action in restraint of free competitive bidding in connection with this bid;

D. It has not in any way violated the ethical conduct or other provisions of the County's Public Purchases Ordinances; and

E. It currently has no interest and shall not acquire any interest, direct or indirect which would conflict in any manner or degree with its performance of any contract resulting from this bid.

5. REQUESTS FOR EXPLANATIONS BY BIDDERS:

A. Requests for Explanation: Any explanation desired by the bidder regarding the meaning or interpretation of specifications or any part of this bid must be requested in writing and received in the County Manager's Office not less than five (5) working days before the bid opening date.

B. Response to Bids: Oral explanations or instructions given prior to the opening of the offer shall not be binding. Any official explanations must be issued, in writing, by the County Manager or his designee.

6. ADDENDA:

Addenda: Changes or amendments to specifications, conditions or provisions herein may be initialed ONLY through the County Manager's Office in the form of a written addendum.

Any addenda shall become a part of this bid and should be acknowledged either by being signed and returned with the bid or through letter or telegram that arrives prior to the opening of the bid. Failure to do so may result in disqualification of the bid.

It is the responsibility of all vendors considering making a bid in response to this invitation to ensure that they have received all addenda prior to making a bid. Bidders may contact the County Manager's Office to obtain information regarding any addenda issued. Failure to obtain an addendum shall not be grounds for overturning a recommendation of award.

7. CLARIFICATION OF BIDS:

The County may, in the evaluation of bids, request clarification from bidders regarding their bid, obtain additional material or literature, and pursue other avenues of research as necessary to ensure that a thorough evaluation is conducted.

8. SUBMISSION OF BID:

A. The Lincoln County Board of Commissioners reserves the right to reject any or all bids received, to waive any informality in bids, and in the case of ambiguity or lack of clearness, the right to determine the best bid or to reject the same and to waive irregularities and technicalities, and/or to accept any item on the bid.

B. Time:

(1) Bids for purchases, services and construction will be advertised for opening at 2:00 p.m., unless otherwise stated.

(2) Bids not received by the time and date indicated on the Invitation for Bids will not be accepted for consideration and will be returned unopened.

(3) Time of proposed delivery by the bidder must be stated in definite terms. If time varies for different items, the bidder should so state.

C. Hand-Carried: Bids may be hand-carried to the County Manager's Office at 300 Central Avenue, Carrizozo, New Mexico 88301.

D. Mailed: Bids may be mailed to the attention of the County Manager's Office, County of Lincoln, P.O. Box 711, Carrizozo, New Mexico 88301-0711. Bids which are mailed or otherwise delivered prior to the point of opening must contain the name of the project as is detailed in the Invitation to Bid. This information shall be included on ALL EXTERIOR PACKAGING. The County shall not be responsible for bids that are mailed and not received by the opening date and time specified in the solicitation.

E. Receipts: Receipts for hand-delivered bids shall be issued by the Office of the County Manager (upon request) for bids which are hand-carried.

F. Envelope Preparation:

(1) The envelope/package containing a bid must be sealed and the following identifying information legibly written or typed on the outside:

a. Name of Bidder;
b. Bid number assigned by the County to the Invitation for Bids; and
c. Opening date as identified on the bid or subsequent addenda.

(2) Bids received that do not state "**SEALED BID**" and show the bid number on the outside of the sealed envelope or package may be opened prior to bid opening, as the County cannot know it is a sealed bid unless it is marked properly. Therefore, the words, "**SEALED BID**" along with the **BID NUMBER** must appear clearly on the sealed envelope or package of all bids.

G. No Other Methods of Bid Delivery: Neither telephone, telegraphic, or facsimile bid shall be accepted.

9. EQUAL OPPORTUNITY IN EMPLOYMENT:

Lincoln County does not discriminate on the basis of race, color, national origin, sex, religion, age or disability in the employment or the provision of services. Contractors shall be in compliance with the American With Disabilities Act requirements.

10. OSHA REQUIREMENTS:

A. In employment: Lincoln County shall contract with companies or firms whose operators and equipment meet OSHA (Occupational Safety and Health Administration) standards in their field of expertise.

B. For Equipment: The equipment to be supplied to the County of Lincoln must comply with all requirements and standards as specified by the Federal Government's Occupational Safety and Health Act of 1971. All guards and protectors as well as appropriate markings will be in place before delivery. Items not meeting OSHA specifications will be refused. Supplier may be required at his expense to provide training to county employees in the operation of this item, and its maintenance at the convenience of the County of Lincoln.

11. OTHER REQUIREMENTS:

Bidders and/or vendors doing business with the County of Lincoln must be in compliance with the Federal Civil Rights Act of 1964 and Title VII of that Act. Rev., 1979.

12. WITHDRAWAL OF BIDS:

A bid may be withdrawn in person at any time BEFORE the scheduled opening of bids, provided a receipt for the withdrawn bids is signed by the bidder or the bidder's authorized representative. The County reserves the right to request proof of authorization to withdraw a bid.

13. OPENING OF BIDS:

A. Time and Place: Bids will be opened by the Purchasing Department at the time and place identified in this Bid. Openings are open to the public. Bidders are encouraged to attend.

B. Bidders or their representatives may be present at the bid opening.

14. DISQUALIFICATION OF BID:

The County reserves the right to reject a bid for, including but not limited to, any one or more of the following circumstances:

A. In the past, the bidder has failed to comply with previous contractual commitments or bids to the County.

B. In the opinion of the County, the bidder is not capable of providing the offered goods, services, or construction as offered or required by the bid or is otherwise not a responsible bidder.

C. The bidder has not provided sufficient or detailed information which allows for the evaluation of the bid.

D. In the opinion of the County the offered prices are higher than the prices for which the specified items or services can be purchased on the open market.

E. The bidder failed to properly fill in any space on the Invitation for Bids form and attached documents where information or a signature is required.

F. The bidder did not, at the time the bid is made, have an appropriate New Mexico Contractor's License or Certification when one is required by law, regulation or this Bid.

G. The bidder failed to submit with their bid, bid bonds or other material requirements of the Bid or has otherwise submitted a non-responsive bid.

H. There are unauthorized additions, conditions, alternate proposals or other irregularities of any kind which might make the bid incomplete, indefinite or ambiguous in meaning.

I. Bid was not submitted in ink or typewritten or there is any erasure or alteration of worlds or figures relating to pricing which is not initialed in ink by the bidder.

J. The County determines that a bid contains any misrepresentations whatsoever.

15. REJECTION/CANCELLATION OF BIDS:

Any solicitation, prior to opening or after opening, may be canceled or any or all bids may be rejected in whole or in part when it is in the best interests of the County.

16. MINOR OR TECHNICAL IRREGULARITIES:

Minor or technical irregularities in a bid, when there is no effect on price, quality or quantity may be waived, and clerical errors in a bid may be corrected, if permitted by the County Manager and are in the best interests of the County.

17. NONCONFORMING/CONDITIONAL OR COUNTER-BIDS:

A bid which is nonconforming or conditional, whether in part or in whole will be rejected.

18. BID ANALYSIS:

The County reserves the right to analyze, examine and interpret any bid for a minimum period of ninety (90) consecutive calendar days, after the scheduled time for the opening of bids. Bids may not be rescinded during this period except for good cause and with the written approval of the County Manager. In those situations where the analysis/evaluation exceeds the ninety (90) calendar days, bidders may withdraw their bids from consideration.

19. AWARD OF CONTRACT:

A. When Award Occurs: The award of a contract occurs when a Purchase Order is issued or other evidence of acceptance by the County is provided to the bidder. A recommendation of Award does not constitute award of contract.

B. Award: If a contract is awarded, it shall be awarded to the responsive and responsible bidder whose bid is lowest in total price and is the most advantageous to the County, specifications and other factors considered.

C. Basis of Award: The County reserves the right to award a contract based on this Bid in total or by a group of items, on the basis of individual items, or any combination of these, which in the judgment of the County Manager, best serves the interests of the County, unless otherwise stated in this Bid.

D. Increase of Quantities: The County reserves the right to increase the quantities of items of tangible personal property, services or construction to be provided within a twelve (12) month period, under the terms of the Contract, at the same prices, with the consent of the Contractor.

E. Decrease of Quantities: The County reserves the right to decrease the quantities of items of tangible personal property, services or construction to be provided under the terms of the Contract. However, the Contractor shall be offered an opportunity to cancel the portion of the Contract affected by such a decrease if the Contractor is not able to meet the contracted prices by delivering the decreased amount. This clause shall not have effect if the Contract was originally awarded based on estimated quantities.

F. Contract Changes In no case shall a contract be changed without the priori written approval of the Purchasing Officer.

G. To qualify for the five percent (5%) in state Resident Preference, the bidder must provide their assigned Resident Certification Number with their bid. (An appropriate place is designated in the Bid Form.) If a bidder does not provide their assigned Resident Certification Number with their bid, the bid shall not be considered as made by a resident business or a resident manufacturer, and no preference shall be applied during the analysis of that bid

NOTE: Your State Tax Number is NOT your Resident Certification Number.

20. PROTEST PROCESS:

A. Any bidder who is aggrieved in connection with a solicitation or award of an Agreement may protest to the County Manager of Lincoln County in accordance with the requirements of the County of Lincoln's Procurement Regulations and the State Procurement Code. The protest should be made in writing within 24 hours after the facts or occurrences giving rise thereto, but in no case later than 15 calendar days after the facts or occurrences giving rise thereto.

B. In the event of a timely protest under this section, the Purchasing Officer and the County of Lincoln shall not proceed further with the procurement unless the County Manager makes a determination that the award of Agreement is necessary to protect substantial interests of the County of Lincoln (13-1-173 NMSA 1978).

C. The County Manager or his designee shall have the authority to take any action reasonably necessary to resolve a protest of an aggrieved bidder concerning a procurement. This authority shall be exercised in accordance with adopted regulations, but shall not include the authority to award money damages or attorney's fees (13-1-174 NMSA 1978).

D. The County Manager or his designee shall promptly issue a determination relating to the protest. The determination shall:
   (1) state the reasons for the action taken; and
   (2) inform the Protestant of the right to judicial review of the determination pursuant to 13-1-183 NMSA 1978.

E. A copy of the determination issued under 13-1-175 NMSA 1978 shall immediately be mailed to the Protestant and other bidders involved in the procurement (13-1-176 NMSA 1978).

21. DELIVERY, ACCEPTANCE AND GUARANTEE:

A. No Delivery Before Purchase Order is Issued: No bidder, including the bidder to whom an award is made shall deliver any item of tangible personal property, commence services or construction prior to the issuance of a Purchase Order or Notice to Proceed issued by the County Manager's Office.

B. Cancellation for Non-Delivery: The County reserves the right to cancel any order not delivered by a guaranteed date stipulated in this bid or any contract resulting from this invitation without liability on the County's part.

C. Acceptance of Delivery: Acceptance by the County of any delivery shall not relieve the Contractor of any guarantee or warranty, expressed or implied. Such acceptance of delivery shall not be considered an acceptance of services or materials not in accordance with the specifications. Such acceptance of delivery shall not waive the County's right to require replacement of defective material or inadequate service.

22. INSPECTIONS:

A. Prior to Acceptance of Delivery: All items of tangible personal property, services or construction shall be provided exactly as offered, and may be inspected prior to acceptance of delivery by the County.

B. Inferior Materials, Etc.: All items of tangible personal property, services or construction found inferior to the quality specified in this Bid, deficient or incorrect in weight, measurement, workmanship, handicraft or otherwise, may be rejected as a whole or in part and then shall be removed by the Contractor at the Contractor's own risk and expense promptly after notice of rejection. The Contractor shall assume responsibility for taking the necessary action to correct or replace the rejected items, within the time frame specified in the notice of rejection.

23. INVOICE AND PAYMENTS

The Contractor shall submit an accurate invoice, in duplicate, for each purchase. Invoices shall refer to the Purchase Order Number, the Release Form Number, if applicable, and shall be itemized unless otherwise specified in this Bid. Invoices are to be mailed to: Lincoln County Board of Commissioners, Accounts Payable, P.O. Box 711, Carrizozo, New Mexico 88301-0711.

24. DEFAULT/TERMINATION FOR CAUSE:

If, through any cause, the Contractor fails to fulfill the Contractor's obligations under any contract resulting from this Bid in a timely and proper manner, or if the Contractor violates any of the covenants, agreements or stipulations of such contract, the County shall notify the Contractor of such violations in writing and allow the Contractor a reasonable time, set out in the notice, to correct the default. If the default is not corrected within the specified time period, the County shall have the right to cancel the contract and any or all other current contracts with the Contractor, and, if applicable, to purchase the required goods or services from another source or sources. The County shall provide written notice to the Contractor specifying the effective date of cancellation. The notice of cancellation may be contained in the notice of default.

If a contract resulting from this Bid is canceled, the Contractor shall not be relieved of liability to the County for damages caused by its breach of the Contract. The County reserves the right to recover such damages, including but not limited to any excess cost incurred in having to purchase contract goods/services from other sources by a deduction from an unpaid balance due to the Contractor, collection against a performance or labor and materials payment bond, a combination of these remedies, or any other legal method available. In addition, the Contractor may be removed from the County Manager's Vendor List or determined to be ineligible to respond to future solicitations, as being not responsible.

25. TERMINATION FOR THE CONVENIENCE OF THE COUNTY:

The County may terminate any contract resulting from this Bid at any time by giving at least thirty (30) days' notice in writing of such termination to the Contractor. In such event, the Contractor shall be paid under the terms of the contract for all goods/services provided to and accepted by the County, if ordered or accepted by the County prior to the effective date of termination.

26. TERMINATION FOR LACK OF APPROPRIATIONS:

Funding for the Contract resulting from this Bid has been appropriated by the County Commission for the County's current fiscal year. Notwithstanding any other provisions in the Contract resulting from this Bid, its continuation beyond the end of the fiscal year is contingent on the County Commission making the appropriations necessary to fund the Contract. If sufficient appropriations are not made, the Contract may be terminated at the end of the County's then current fiscal year upon written notice given by the County to the Contractor. Such termination shall not constitute a default. All payment obligations of the County and all of its interest in the Contract will cease upon the date of termination. The County's decision as to whether sufficient appropriations are available shall be accepted by the Contractor and shall be final.

27. CONTRACTOR'S AND SUBCONTRACTOR'S INSURANCE

The Contractor may carry such other insurance as he deems necessary to protect his own interests. He shall, at his sole cost and expense, procure and carry throughout the life of the agreement the insurance hereinafter specified.

Such insurance shall cover both the Contractor and his Subcontractors, or separate policies shall be provided for each Subcontractor and shall be carried with an insurance company licensed to transact business in the State of New Mexico. The insurance shall be for the protection of the Contractor and Subcontractors from claims under worker's compensation laws, disability benefit laws or other employee benefit laws; from claims for damages to property, including loss of use thereof, any or all of which may arise out of or result from the Contractor's operations under the Contract Documents, whether such operations be at the site of the work or elsewhere and whether they be carried on by the Contractor or by any Subcontractor or anyone directly employed by any of them or for whose acts any of them may be legally liable. Such insurance shall be written for not less than the limits of liability set out below. Work may not be started on the project until the Certificate of Insurance on the form provided has been filed and approved with the owner or engineer.

A. Comprehensive General Liability Insurance. The Contractor shall procure and maintain during the life of this Contract, and shall require Subcontractors, if any, to procure and maintain during the life of his subcontract, comprehensive general liability insurance in amounts of not less than $300,000.00 for injuries, including death, to any one person, and, subject to the same limit each person, in amounts not less than $300,000.00 in any one occurrence; and in amounts not less than $300,000.00 for property damages in any one accident. Such policies of insurance must include coverage under all sections of the schedule of hazards of the said comprehensive general liability policy form, and must include collapse (c), explosion (x) and underground (u) liability coverage.

The above requirements shall include protection from:

(1) Damage to, or destruction of public and private property located below the surface of the ground, including telephone conduit, power conduit, traffic signal cables, fire alarm circuits, gas mains, gas serve connections, sanitary sewers, house sewers or building sewer connections, water mains, water service connections, steam lines, petroleum products pipelines, storm sewers and inlet lines, and including all appurtenances thereto;

injury or death to a trenching and beautifying with or without the use of mechanical equipment.

(2) The collapse of, or structural damage to any building, house or structure, utility poles, curb and gutter and sidewalk on public or private property; destruction of or damage to other public and private property including injury or death to a person or persons caused by the Contractor's operations under the Contract. Removal of buildings, structures (including their supports), trees, and utility poles, excavations below the surface of the grounds, including blasting, trenching and beautifying with or without the use of mechanical equipment. "Other public and private property," as used above, shall include lawns, plants, flowers, trees, fences, yard walls, etc. The liability insurance shall include the standard assault and better endorsement.

B. Owner's Protective Public Liability and Protective Property Damage Insurance. The Contractor shall procure and maintain during the life of this Contract, at his own expense, owner's protective public liability and protective property damage insurance in favor of the Owner in the amount not less than: (1) the sum of One Hundred Thousand Dollars ($100,000.00) for damage to or destruction of property arising out of a single occurrence; (2) the sum of Five Hundred Thousand Dollars ($500,000.00) to any person for any number of claims arising out of a single occurrence for all damages other than property damage; or (3) the sum of One Million Fifty Dollars ($1,000,050.00) for all claims arising out of a single occurrence. This policy shall also include the standard assault and battery endorsement.

C. Worker's Compensation Insurance. The Contractor shall procure and shall maintain during the life of this Contract, Worker's Compensation Insurance in statutory or standard form in an amount covering all of his employees to be engaged in the work under this Contract, as required by the State of New Mexico or the regulatory requirements of the Contractor's licensing bureau. Such insurance policies must include coverage under Section 52-1-10, NMSA 1978, for safety devices.

D. Automobile Public Liability and Property Damage. The Contractor shall maintain automobile public liability insurance to protect him and the Owner from any and all claims arising from the use of the following in the execution of work included in this Contract:

(1) Contractor's own automobile and trucks;
(2) Hired automobiles and trucks;
(3) Automobiles and trucks not owned by Contractor; and
(4) BI/PD not less than $300,000.00.

E. Transit Insurance. The Contractor shall secure insurance to protect himself from damage to equipment in transit.

F. Approval of Insurance. Neither approval by the Owner of any insurance supplied by a Contractor or a Subcontractor, nor a failure to disapprove that insurance shall relieve the Contractor or Subcontractor of full responsibility to maintain in full force and effect the above-described insurance or for liability, damages, and accidents as set forth herein.

G. Proof of Insurance. Prior to the commencement of any work hereunder, Contractor shall furnish to the Owner proof of the insurances required in this Section. All such Certificates of Insurance shall provide that the Insurance Company(ies) will give Owner ten (10) days prior written notice before any material change in or cancellation of any such policy.